Soft-Lite® Windows
Bringing quality to light.

10250 Philipp Parkway
Streetsboro, Ohio 44241

"Premium AIP Plus - Impact"
CASEMENT WINDOW

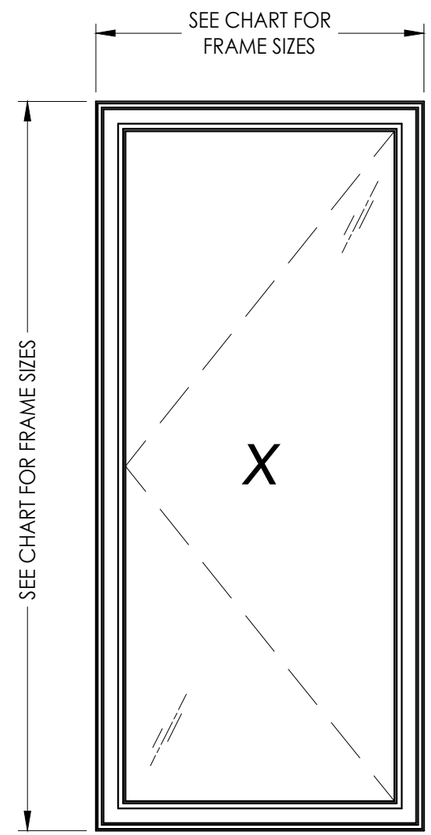

GENERAL NOTES

1. This product has been evaluated and is in compliance with the 8th Edition (2023) Florida Building Code (FBC) structural requirements including the "High Velocity Hurricane Zone" (HVHZ).
2. Product anchors shall be as listed and spaced as shown on details. Anchor embedment to base material shall be beyond wall dressing or stucco.
3. When used in the "HVHZ" this product complies with Section 1626 of the Florida Building Code and does not require an impact resistant covering.
4. When used in areas outside of the "HVHZ" requiring wind borne debris protection this product complies with FBC Sections 1609.1.2 & R301.2.1.2 and does not require an impact resistant covering. This product meets missile level "D" and includes Wind Zone 4 as defined in ASTM E1996 and FBC Sections 1609.1.2.2 & R301.2.1.2.1.
5. For 2x stud framing construction, anchoring of these units shall be the same as that shown for 2x buck masonry construction.
6. Site conditions that deviate from the details of this drawing require further engineering analysis by a licensed engineer or registered architect.
7. This product meets water infiltration requirements for "HVHZ".

MAX. FRAME DIMENSION	MAX. D.L.O. DIMENSION	GLASS TYPE	DESIGN PRESSURE (PSF)	
			POSITIVE	NEGATIVE
36.0" X 72.0"	29.5" x 65.5"	G1	+50.0	-50.0

NOTE: In the "HVHZ", this product is approved for installation at 30 feet or less above ground only.

TABLE OF CONTENTS

SHEET#	DESCRIPTION
1	Typical elevations, design pressures and general notes
2	Horizontal and vertical cross sections
3	Buck and frame anchoring
4	Bill of materials, components and glazing details

L7

L. F. SCHMIDT
LICENSE
No. 43409
STATE OF FLORIDA
PROFESSIONAL ENGINEER

Digitally signed by Lyndon F Schmidt
Date: 2023.07.03 14:59:14 -04'00'

This item has been digitally signed and sealed by **L. F. Schmidt, P.E.** on the date adjacent to the seal.

Printed copies of this document are not considered signed and sealed and the signature must be verified on any electronic copies.

THIS PRODUCT APPROVAL IS VALID ONLY FOR THE STATE OF FLORIDA

Documents Prepared By:
Lyndon F. Schmidt
P.E. No. 43409

RW BUILDING CONSULTANTS, INC.
P.O. Box 230, Valrico, FL 33595
Phone No.: 813.659.9197
FBPE Registry No. 9813

PRODUCT: SOFT-LITE WINDOWS

PART OR ASSEMBLY: TYPICAL ELEVATION, DESIGN PRESSURES & GENERAL NOTES

REVISIONS

NO.	DATE		BY
4	7/03/23	UPDATE TO 8TH ED. (2023) FBC	LFS
3	1/31/22	REVISE GLAZING DETAILS	LFS
2	7/13/20	UPDATE TO 7TH ED. (2020) FBC	LFS
1	7/20/17	UPDATE TO 6TH ED. (2017) FBC	LFS

DATE: 8/26/15
SCALE: N.T.S.
DWG. BY: JK
CHK. BY: LFS
DRAWING NO.: FL-15779.3
SHEET 1 OF 4

© 2015 R.W. Building Consultants Inc.

G:\2023 FBC DRAWINGS\Soft-Lite\FL-15779 R6\FL-15779.2-3.dwg

Hardware Notes:
1. Snubber/retainers located as follows:
   72" frame height: (5) 6" from top and 14.75" O.C. thereafter
2. Multi-point locks w/ keepers & tie bars located as follows:
   72" frame height: (5) at 4.5", 20", 36", 50.75 & 66.75" from sill
3. Operator (1) located on sill, 10.5" from jamb.
4. Item #H located thru Tie bar clips.
5. Item #F located thru hinge track.

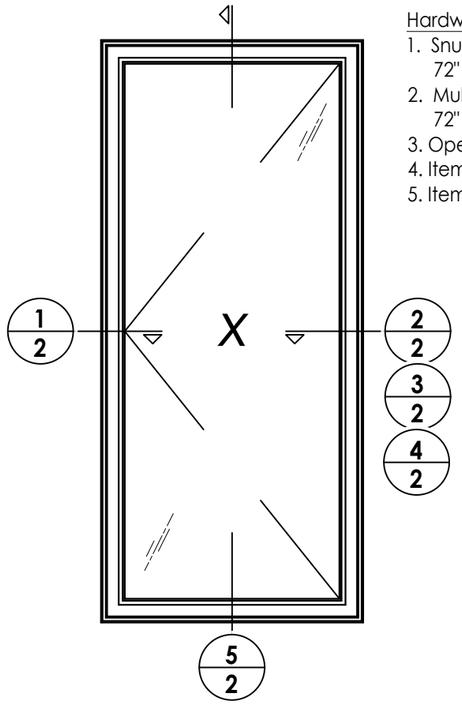

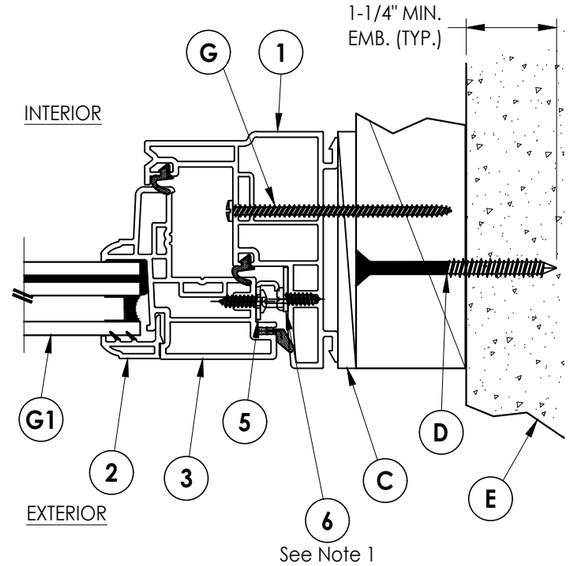

4/2 **VERTICAL CROSS SECTION**
Shown w/ 2X buck

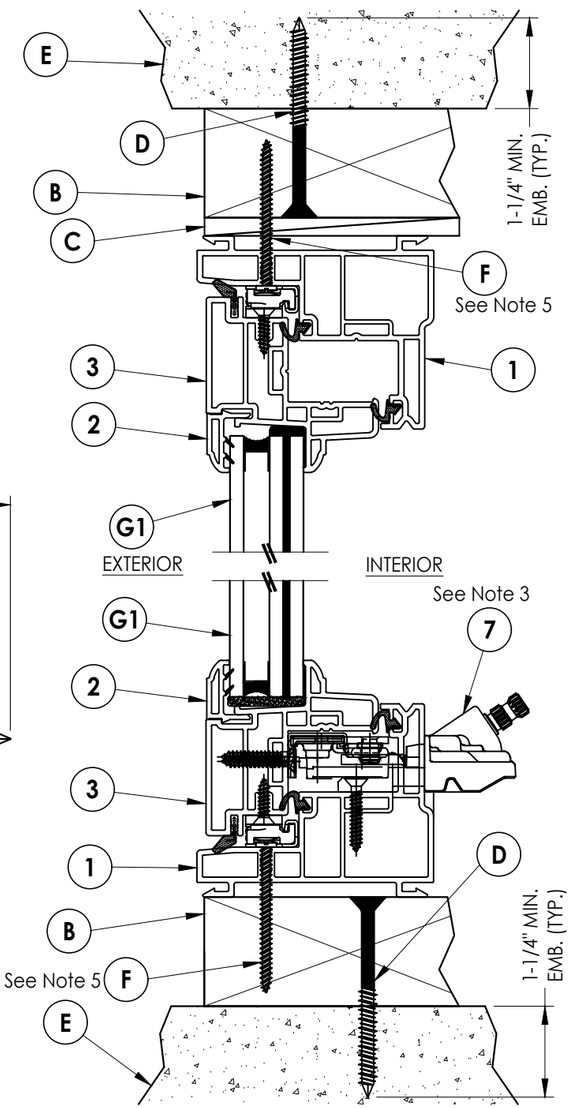

5/2 **VERTICAL CROSS SECTION**
Shown w/ 2X buck

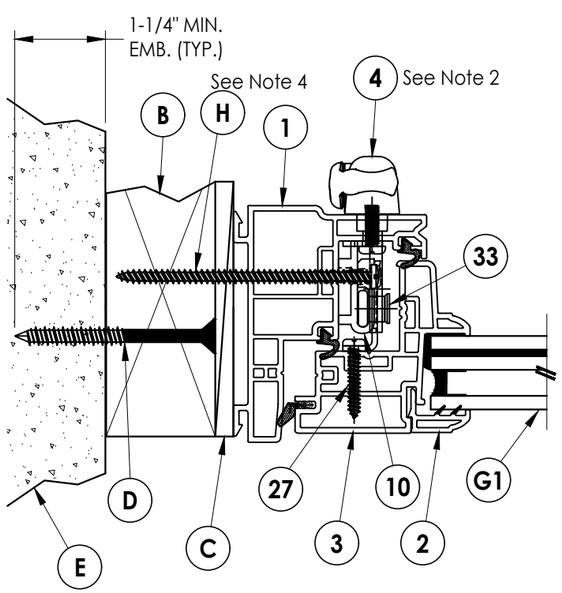

1/2 **HORIZONTAL CROSS SECTION**
Shown w/ 2X buck

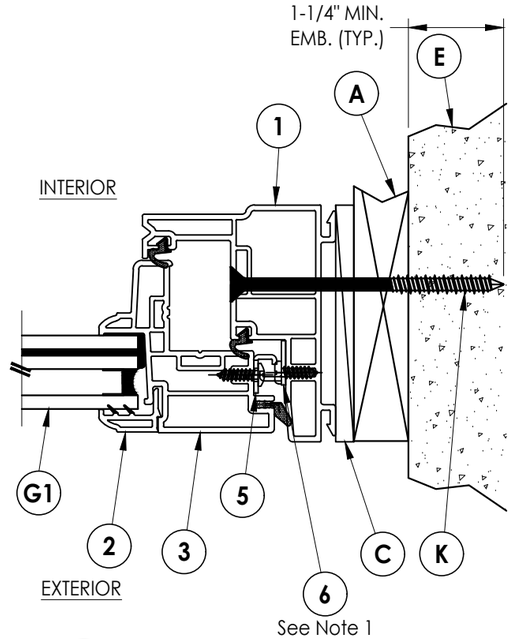

3/2 **VERTICAL CROSS SECTION**
Shown w/ 1X buck

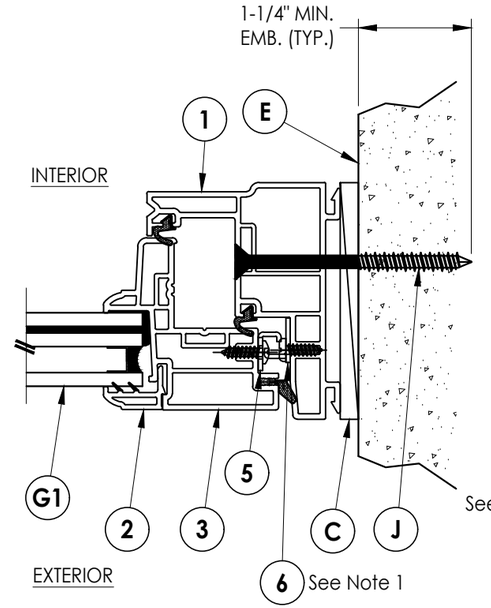

2/2 **HORIZONTAL CROSS SECTION**
Shown direct to masonry

Documents Prepared By:
Lyndon F. Schmidt
P.E. No. 43409
RW BUILDING CONSULTANTS, INC.
P.O. Box 230, Valrico, FL 33595
Phone No.: 813.659.9197
FBPE Registry No. 9813

PRODUCT: SOFT-LITE WINDOWS

PART OR ASSEMBLY: HORIZONTAL AND VERTICAL CROSS SECTIONS

REVISIONS

NO.	DATE		BY
4	7/03/23	UPDATE TO 8TH ED. (2023) FBC	LFS
3	1/31/22	REVISE GLAZING DETAILS	LFS
2	7/13/20	UPDATE TO 7TH ED. (2020) FBC	LFS
1	7/20/17	UPDATE TO 6TH ED. (2017) FBC	LFS

DATE: 8/26/15
SCALE: N.T.S.
DWG. BY: JK
CHK. BY: LFS
DRAWING NO.: FL-15779.3
SHEET 2 OF 4

© 2015 R.W. Building Consultants Inc.

G:\2023 FBC DRAWINGS\Soft-Lite\FL-15779 R6\FL-15779.2-3.dwg

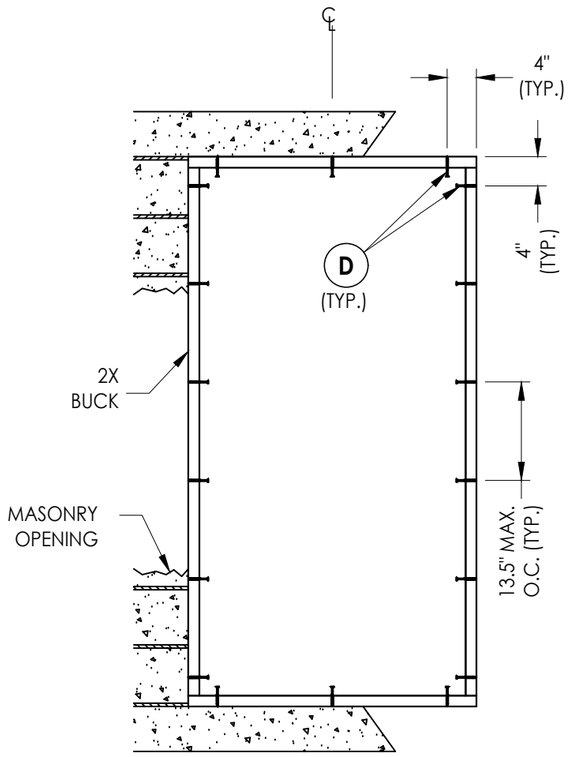

BUCK ANCHORING

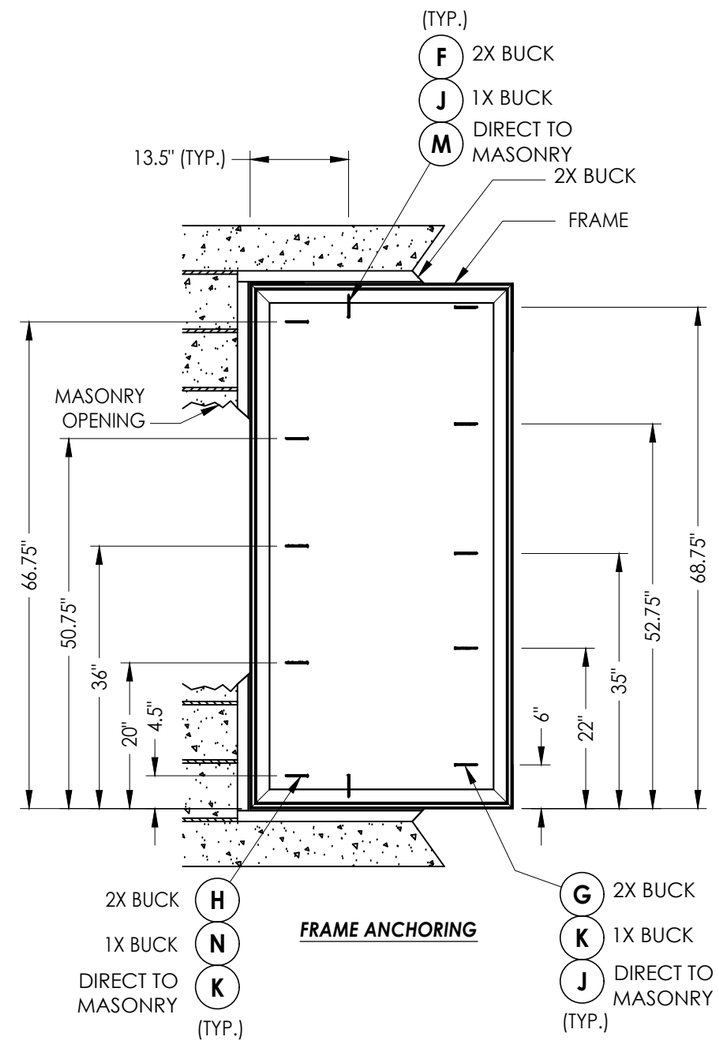

FRAME ANCHORING

CONCRETE ANCHOR NOTES:

1. *Concrete anchor locations at the corners may be adjusted to maintain the min. edge distance to mortar joints.*
2. *Concrete anchor locations noted as "MAX. ON CENTER" must be adjusted to maintain the min. edge distance to mortar joints, additional concrete anchors may be required to ensure the "MAX. ON CENTER" dimension are not exceeded.*
3. *Concrete anchor table:*

ANCHOR TYPE	ANCHOR SIZE	MIN. EMBEDMENT	MIN. CLEARANCE TO MASONRY EDGE	MIN. CLEARANCE TO ADJACENT ANCHOR
ITW TAPCON®	1/4"	1-1/4"	2"	4"
DeWALT ULTRACON+®	1/4"	1-1/4"	1"	4"

WOOD SCREW INSTALLATION NOTES:

1. *Maintain a minimum 5/8" edge distance, 1" end distance, & 1" o.c. spacing of wood screws to prevent the splitting of wood.*

Documents Prepared By:
Lyndon F. Schmidt
P.E. No. 43409
RW BUILDING CONSULTANTS, INC.
P.O. Box 230, Valrico, FL 33595
Phone No.: 813.659.9197
FBPE Registry No. 9813

PRODUCT: SOFT-LITE WINDOWS

PART OR ASSEMBLY: BUCK & FRAME ANCHORING

NO.	DATE	REVISIONS	BY
4	7/03/23	UPDATE TO 8TH ED. (2023) FBC	LFS
3	1/31/22	REVISE GLAZING DETAILS	LFS
2	7/13/20	UPDATE TO 7TH ED. (2020) FBC	LFS
1	7/20/17	UPDATE TO 6TH ED. (2017) FBC	LFS

DATE: 8/26/15
SCALE: N.T.S.
DWG. BY: JK
CHK. BY: LFS
DRAWING NO.: FL-15779.3
SHEET 3 OF 4

© 2015 R.W. Building Consultants Inc.

G:\2023 FBC DRAWINGS\Soft-Lite\FL-15779 R6\FL-15779.2-3.dwg

BILL OF MATERIALS

ITEM #	DESCRIPTION	MATERIAL
A	1X BUCK (SG >= 0.55)	WOOD
B	2X BUCK (SG >= 0.55)	WOOD
C	1/4" MAX. SHIM SPACE	-
D	1/4" X 2-3/4" PFH DeWALT OR ITW CONCRETE SCREW	STEEL
E	MASONRY - 3,000 PSI MIN. CONCRETE CONFORMING TO ACI 301 OR HOLLOW BLOCK CONFORMING TO ASTM C90	CONCRETE
F	#8 X 2" PPH SMS (1-1/16" MIN. EMBEDMENT)	STEEL
G	#10 X 3" PPH SMS (1-1/4" MIN. EMBEDMENT)	STEEL
H	#10 X 3-1/2" PPH SMS (1-5/16" MIN. EMBEDMENT)	STEEL
J	1/4" X 3-1/4" PFH DeWALT OR ITW CONCRETE SCREW	STEEL
K	1/4" X 3-3/4" PFH DeWALT OR ITW CONCRETE SCREW	STEEL
M	1/4" X 2-1/4" PFH DeWALT OR ITW CONCRETE SCREW	STEEL
N	1/4" X 4" PFH DeWALT OR ITW CONCRETE SCREW	STEEL
1	CASEMENT MAIN FRAME*	PVC
2	GLAZING BEAD*	PVC
3	CASEMENT MAIN SASH*	PVC
4	LOCK HANDLE ASSY. (MULTI-POINT LOCK)	STEEL
5	SNUBBER	-
6	SNUBBER RETAINER	-
7	CASEMENT OPERATOR	STEEL
8	#8 X 5/8" PPH SMS	STEEL
10	LOCKING BAR RETAINER CLIP	STEEL
27	#8 X 1" PAN HEAD SMS	STEEL
33	TIE BAR LOCK PIN	STEEL

* THE APPROVED WHITE RIGID PVC EXTERIOR EXTRUSIONS FOR WINDOWS ARE TO BE PRODUCED BY EXTRUDERS LICENSEES IN "AAMA CERTIFICATIONS PROGRAMS FOR RIGID PVC EXTRUSIONS".

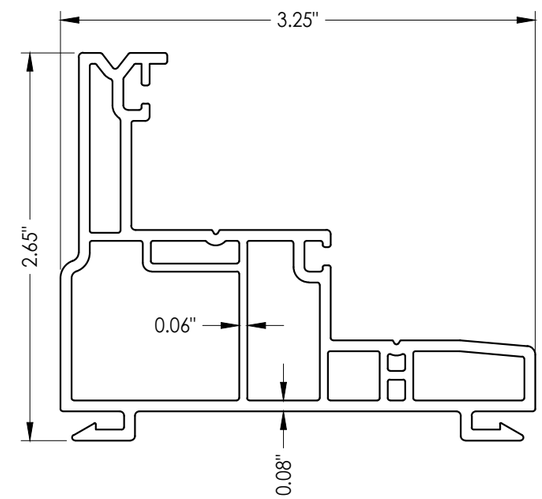

1 MAIN FRAME

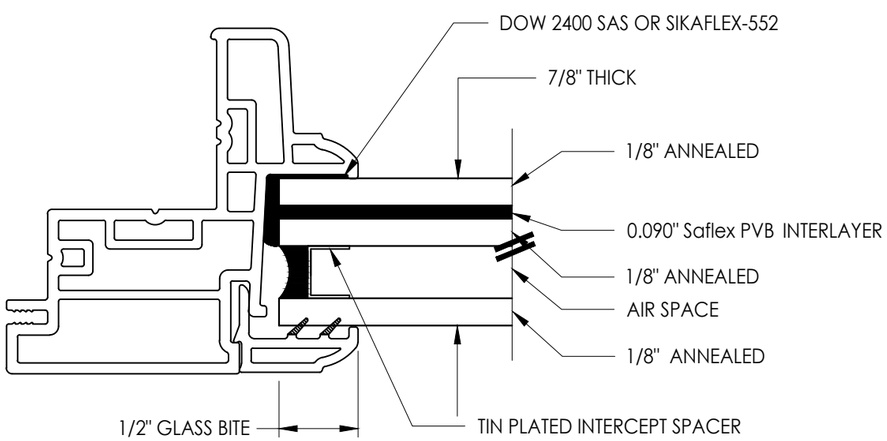

G1 GLAZING DETAIL

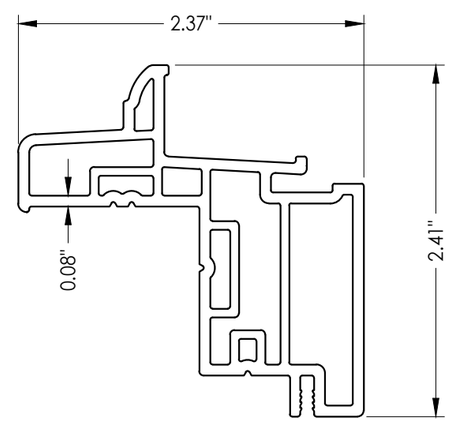

3 CASEMENT FRAME

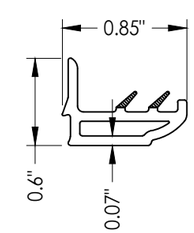

2 GLAZING BEAD

Documents Prepared By:
Lyndon F. Schmidt
P.E. No. 43409

RW BUILDING CONSULTANTS, INC.
P.O. Box 230, Valrico, FL 33595
Phone No.: 813.659.9197
FBPE Registry No. 9813

PRODUCT: SOFT-LITE WINDOWS

PART OR ASSEMBLY: BILL OF MATERIALS, COMPONENTS AND GLAZING DETAILS

REVISIONS

NO.	DATE	BY
4	7/03/23	LFS
3	1/31/22	LFS
2	7/13/20	LFS
1	7/20/17	LFS

UPDATE TO 8TH ED. (2023) FBC
REVISE GLAZING DETAILS
UPDATE TO 7TH ED. (2020) FBC
UPDATE TO 6TH ED. (2017) FBC

DATE: 8/26/15
SCALE: N.T.S.
DWG. BY: JK
CHK. BY: LFS
DRAWING NO.: FL-15779.3
SHEET 4 OF 4

© 2015 R.W. Building Consultants Inc.

G:\2023 FBC DRAWINGS\Soft-Lite\FL-15779 R6\FL-15779.2-3.dwg